LOUIS TELLIER
RIEN NE REMPLACE LE FAIT MAIN

# Eclaté commercial
# Moulin professionnel N°5

## M5 (étamé)
## X5 (inox)

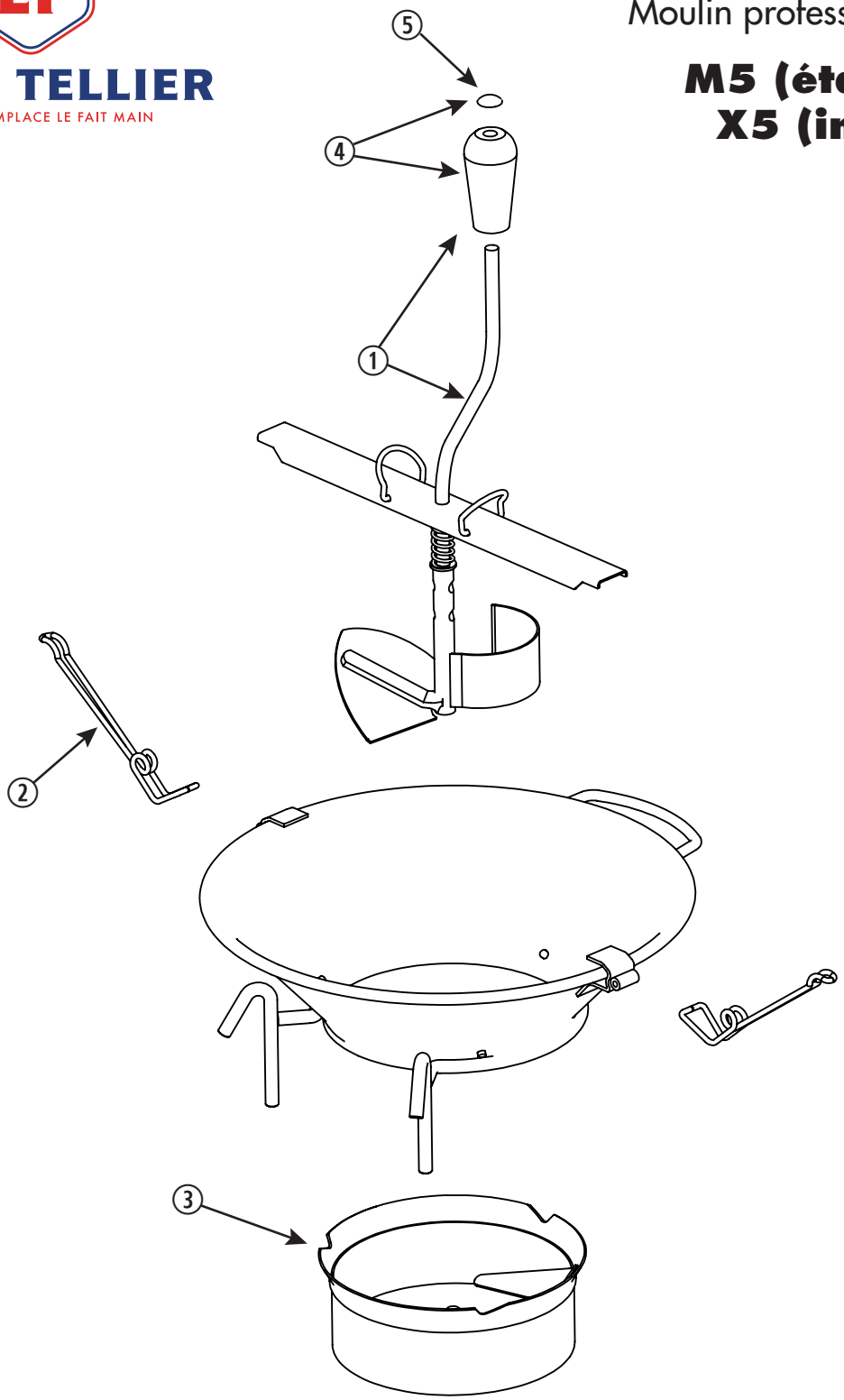


| No. ARTICLE | REFERENCE PIECE X5 Inox | M5 Etamé | DESCRIPTION |
|---|---|---|---|
| 1 | X5002 | M5002 | ARBRE-MANIVELLE TRAVERSE POIGNEE |
| 2 | X5003-4 | | RESSORT D'ACCROCHAGE - LOT DE 4 |
| 3 | X5010 | M5010 | GRILLE Ø1MM |
| | X5015 | M5015 | GRILLE Ø1.5MM |
| | X5020 | M5020 | GRILLE Ø 2MM |
| | X5030 | M5030 | GRILLE Ø 3MM |
| | X5040 | M5040 | GRILLE Ø 4MM |
| 4 | | M5005-2 | LOT 2 POIGNEES ET 2 RONDELLES + 5 ENJOLIVEURS |
| | X5005-2 | | LOT 2 POIGNEES + 5 ENJOLIVEURS |
| 5 | M5006-10 | | ENJOLIVEUR SEUL- LOT DE 10 |